Presented at the *Second World Conference on Structural Control*,
Kyoto, Japan, June 28 – July 1, 1998. Proceedings, in press.

"Smart" Dampers for Seismic Protection of Structures: A Full-Scale Study

Billie F. Spencer, Jr.,[1] Guangqiang Yang,[1] J. David Carlson[2] and Michael K. Sain[3]

[1]*Dept. of Civil Engrg. and Geo. Sci., Univ. of Notre Dame, Notre Dame, IN 46556, USA*
[2]*Lord Corporation, Thomas Lord Research Center, 405 Gregson Drive, Cary, NC 27511, USA*
[3]*Dept. of Electrical Engrg., Univ. of Notre Dame, Notre Dame, IN 46556, USA*

ABSTRACT

Because of their mechanical simplicity, high dynamic range, low power requirements, large force capacity and robustness, magneto-rheological (MR) fluid dampers have been shown to be semi-active control devices that mesh well with application demands and constraints to offer an attractive means of protecting civil infrastructure systems against severe earthquake and wind loading. Following an overview of the essential features of MR fluids, this paper examines the efficacy of various models for prediction of the response of full-scale MR dampers. The predictive ability of both an axisymmetric model and a simpler parallel-plate model is studied. Finally, a comparison between the analytical and experimental results for a 20-ton MR fluid damper is presented.

1. INTRODUCTION

For more than a decade, substantial attention has been devoted to active control of civil engineering structures for earthquake hazard mitigation. These types of control system are often called protective systems and offer the advantage of being able to dynamically modify the response of a structure in order to increase its safety and reliability.

Although we are now at the point where active control systems have been designed and installed in full-scale structures, the engineering community has yet to fully embrace this technology. This lack of acceptance stems, in part, from questions of cost effectiveness, reliability, power requirements, *etc*. In contrast, passive control system, including base isolation, viscoelastic dampers and tuned mass dampers, are well understood and are an accepted means for mitigating the effects of dynamic loadings. However, the passive systems have the

limitation of not being capable to change with varying usage patterns and loading conditions (Fujino et al., 1996).

An alternative approach which offers the reliability of passive devices, yet maintains the versatility and adaptability of fully active systems is found in semi-active control strategies. According to presently accepted definitions, a semi-active control device is one which cannot input energy into the system being controlled (Housner *et al.*, 1997). Examples of such devices include electro-rheological, magneto-rheological fluids dampers, variable orifice dampers, friction controllable isolators and variable stiffness devices (Spencer and Sain, 1997). In contrast to active control devices, semi-active control devices do not have the potential to destabilize the structure (in the bounded input - bounded output sense), and most require little power to operate. Moreover, preliminary studies indicate that the semi-active system can achieve the majority of the performance of fully active systems (Dyke *et al.*, 1996a–c), thus allowing for the possibility of effective response reduction for a wide class of seismic events. For these reasons, significant efforts have been devoted to the development and implementation of semi-active devices.

This paper presents results for one of the most promising classes of semi-active control device, magneto-rheological (MR) dampers, which overcomes many of the expenses and technical difficulties associated with other types of semi-active devices. Following an overview of the essential features of MR fluids, analysis and design of a full-scale MR damper are considered. The predictive ability of both an axisymmetric model and a simpler parallel-plate model are studied. A comparison between the analytical and experimental results for a 20-ton MR fluid damper is then presented which shows the scalability of the technology to devices appropriate for civil engineering applications. At design velocities, the dynamic range of forces produced by this device is more than 10, and the total power required is nominally 40 watts. Because of their mechanical simplicity, low power requirements and high force capacity, magneto-rheological (MR) dampers are shown to mesh well with the demands and constraints of civil infrastructure applications.

2. MAGNETO-RHEOLOGICAL (MR) FLUID CHARACTERISTICS

The initial discovery and development of MR fluids and devices can be credited to Jacob Rabinow at the US National Bureau of Standards (Rainbow, 1948, 1951) in the late 1940s. These fluids are materials that respond to an applied magnetic field with a dramatic change in rheological behavior. The essential characteristic of these fluids is their ability to reversibly change from free-flowing, linear viscous liquids to semi-solids having a controllable yield strength in milliseconds when exposed to a magnetic field. A simple Bingham plasticity model (Phillips, 1969) is effective at describing the essential field dependent fluid characteristics. In this model, the total shear stress τ is given by

$$\tau = \tau_{0(\mathrm{field})}\mathrm{sgn}(\gamma) + \eta\dot{\gamma} \tag{1}$$

where $\tau_{0(\mathrm{field})}$ is the yield stress caused by the applied field, $\dot{\gamma}$ is the shear strain rate, and η is the field-independent plastic viscosity defined as the slope of the measured shear stress versus shear rate. Rainbow’s work is relatively unknown today; only recently has a resurgence in interest in MR fluids been seen and a realization that MR fluids can provide the enabling technology for practical, semi-active vibration control systems.

As a controllable fluid, the primary advantage of an MR fluid stem from the large, controlled yield stress it is able to achieve which allows for smaller sized devices and higher dynamic range (Carlson and Spencer, 1996). From a practical application perspective, note that MR fluid devices can be powered directly from common, low voltage sources (Carlson *et al*., 1994, 1996). Further, standard electrical connectors, wires and feedthroughs can be reliably used, even in mechanically aggressive and dirty environments. This aspect is particularly important in cost sensitive applications. The interested reader is directed to recent reviews on MR fluid characterization and their application are presented by Carlson and Spencer (1996) and Spencer and Sain (1997).

3.FULL-SCALE SEISMIC MR FLUID DAMPER

Spencer et al. (1997) and Dyke et al. (1996a–c) have conducted pilot studies to demonstrate the efficacy of MR dampers for semi-active seismic response control. Through simulations and laboratory model experiments, it has been shown that an MR damper, used in conjunction with the proposed acceleration feedback strategies, outperforms comparable passive damping configurations. In certain cases, it is capable of not only approaching the performance of a linear active control but of actually surpassing its performance, while requiring only a fraction of the input power needed by the active controller.

To prove the scalability of MR fluid technology to devices of appropriate size for civil engineering applications, a full-scale, MR fluid damper has been designed and built. For the nominal design, a maximum damping force of 200,000 N (20-ton) and a dynamic range equal to ten were chosen. A schematic of the damper is shown in Fig. 1. The damper uses a particularly simple geometry in which the outer cylindrical housing is part of the magnetic circuit. The effective fluid orifice is the annular space between the outside of the piston and the inside of the damper cylinder housing. Movement of the piston causes fluid to flow through this

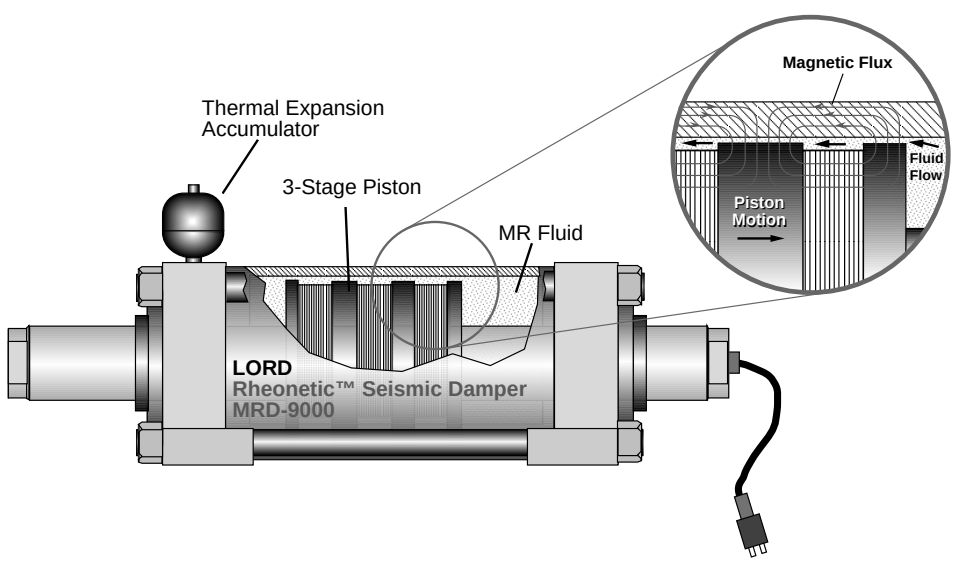

Figure 1. Schematic of 20-ton MR fluid damper.

entire annular region. The damper is double-ended, i.e. the piston is supported by a shaft on both ends. This arrangement has the advantage that a rod-volume compensator does not need to be incorporated into the damper, although a small pressurized accumulator is provided to accommodate thermal expansion of the fluid. The damper has an inside diameter of 20.3 cm and a stroke of ± 8 cm. The electromagnetic coil is wired in three sections on the piston. This results in four effective valve regions as the fluid flows past the piston. The coils contain a total of 1.5 km of wire. The completed damper is 1 m long and with a mass of 250 kg. The damper contains approximately 5 liters of MR fluid. The amount of fluid energized by the magnetic field at any given instant is approximately 90 cm^3.

4. THEORETICAL ANALYSIS OF MR FLUID DAMPER

An axisymmetric model of the fluid flow in the annular gap between the piston and the cylinder housing can be developed to predict the damper’s force-velocity behavior based on Navier-Stokes equations. In certain cases, a substantially simpler parallel-plate model can be used to investigate the damper’s behavior. This section considers the usefulness of both of these models.

4.1 Axisymmetric Model

For the MR damper shown in Fig. 1, the pressure gradient along the flow is resisted by the fluid shear stress which is governed by the Navier-Stokes equation. For the one-dimensional, axisymmetric case, those equations reduce to (Constantinescu, 1995, Gavin *et al.*, 1996)

$$-\frac{dp}{dx}r + \eta\frac{d}{dr}\left[r\frac{d}{dr}u_x(r)\right] = 0 \tag{2}$$

where dp/dx is the constant pressure gradient along the flow, $u_x(r)$ is the flow velocity, η is the fluid viscosity. From Eq. (2), one obtains that the shear stress τ_{rx} satisfies

$$\tau_{rx}(r) = \frac{1}{2}\frac{dp}{dx}r - \frac{D_1}{r} \tag{3}$$

where D_1 is a constant to be determined.

According to the Bingham plasticity model (*i.e.*, Eq. (1)), the MR fluid adjacent to the wall will yield and flow only when the shear stress $\tau_{rx}(r)$ exceeds the yield stress $\tau_0(r)$. With reference to Fig. 2, the shear stress is less than yield stress in the region $r_2 < r < r_1$, which is referred to as the plug flow region (i.e., the MR fluids remain solid and the velocity profile is constant). Thus the boundary conditions for the plug flow region are

$$\begin{gathered}\left|\tau_{rx}(r_2)\right| = \tau_0(r_2) \text{ and } \left|\tau_{rx}(r_1)\right| = \tau_0(r_1) \\ u_x(r_2) = u_x(r_1)\end{gathered} \tag{4}$$

With no-slip conditions, the flow velocities at $r = R_2$ and $r = R_1$ are

$$u_x(R_2) = U \text{ and } u_x(R_1) = 0 \tag{5}$$

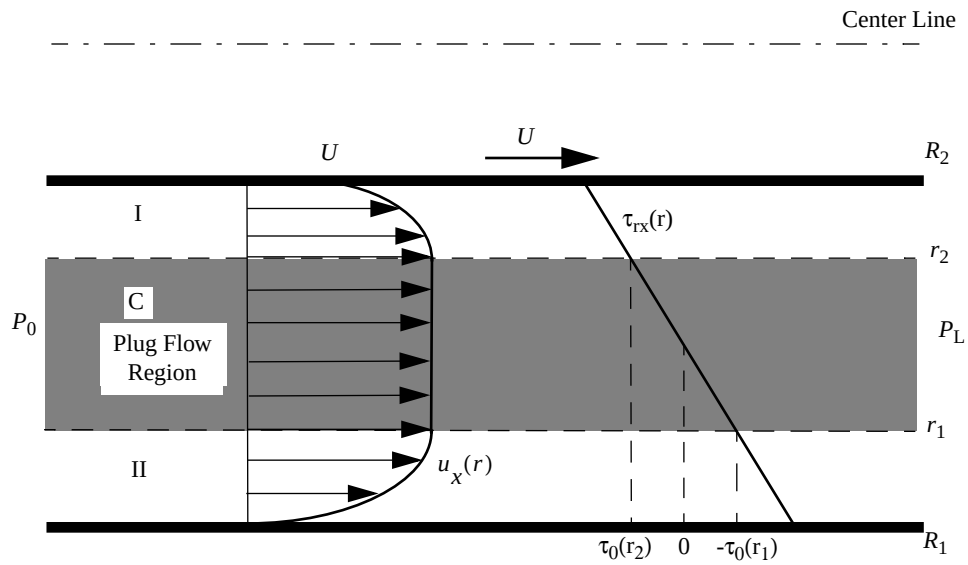

Figure 2. Stress and velocity profiles in the annular duct.

and U is the piston velocity.

By assuming a volume flow rate Q, the resulting equations can be solved numerically to determine the pressure difference Δp between the two ends of the cylinder and are given by

$$\frac{dp}{dx}(R_1^2 - r_1^2 - R_2^2 + r_2^2)/4 + D_1 \ln(R_2 r_1 / r_2 R_1) + D_2 + \eta U = 0 \tag{6}$$

$$Q = UA_p = -\pi R_2^2 U - \frac{\pi}{8\eta}\left[\frac{dp}{dx}(R_1^4 - R_2^4 - r_1^4 + r_2^4) - 4D_1(R_1^2 - R_2^2 - r_1^2 + r_2^2) + 8D_3\right] \tag{7}$$

$$\frac{dp}{dx}(r_1^2 - r_2^2) + 2(\tau_0(r_2)r_2 + \tau_0(r_1)r_1) = 0 \tag{8}$$

where

$$D_1 = \frac{r_1 r_2(\tau_0(r_2)r_1 + \tau_0(r_1)r_2)}{r_2^2 - r_1^2} \tag{9}$$

$$D_2 = \int_{r_2}^{R_2} \tau_0(r)dr + \int_{r_1}^{R_1} \tau_0(r)dr \tag{10}$$

$$D_3 = \int_{r_2}^{R_2} \tau_0(r)r^2 dr + \int_{r_1}^{R_1} \tau_0(r)r^2 dr \tag{11}$$

Then the damper output force is computed as

$$F = \Delta p A_p \tag{12}$$

where $\Delta p = P_L - P_0 = L(dp/dx)$, L is the effective axial pole length, and A_p is the cross-section area of the piston.

In general, the yield stress τ_0 in the axisymmetric model will be a function of r. As will be shown in the subsequent sections, when $R_1 - R_2 \ll R_2$, the variation of the yield stress in the gap can be ignored, and Eqs. (6–11) can be simplified substantially.

4.2 Parallel-Plate Model

Because of the small ratio of the flow gap between the piston and the cylinder housing and the diameter of the damper piston, one might conjecture that the axisymmetric flow field found in the damper can be approximated as flow through a parallel duct, as shown in Fig. 3. To be analogous to the axisymmetric model, the parameter w is taken to be the mean circumference of the damper's annular flow path, which equals to $\pi(R_1 + R_2)$, and h is taken to be the flow gap which equals to $R_1 - R_2$. The equations governing the pressure gradient in the flow of a Bingham fluid through a rectangular duct reduces to the following quintic equation (Phillips, 1969)

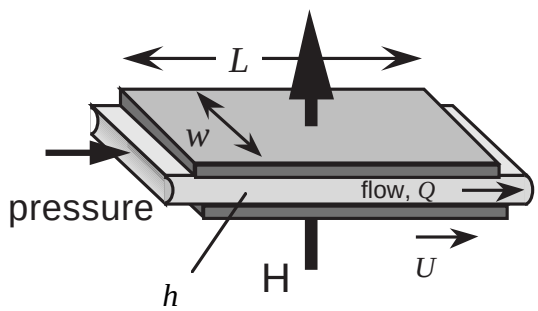

Figure 3. Flow through a parallel duct.

$$3(\mathcal{P} - 2\mathcal{T})^2(\mathcal{P}^3 - (1 + 3\mathcal{T} - \mathcal{V})\mathcal{P}^2 + 4\mathcal{T}^3) + \mathcal{T}\mathcal{V}^2\mathcal{P}^2 = 0 \tag{13}$$

in which the dimensionless velocity $\mathcal{V}$ is

$$\mathcal{V} = \frac{whU}{2Q} \tag{14}$$

and $\mathcal{P}$ and $\mathcal{T}$ are the dimensionless pressure gradient and dimensionless stress given by

$$\mathcal{P} = \frac{wh^3\Delta p}{12Q\eta L}, \qquad \mathcal{T} = \frac{wh^2\tau_0}{12Q\eta} \tag{15}$$

Note that for the damper shown in Fig. 1, $\mathcal{V} < 0$ since the piston motion is in the opposite direction of the fluid flow. The force produced by the damper is then given by

$$F = \frac{12\eta Q A_p L}{wh^3}\mathcal{P} \tag{16}$$

Although there is no analytical solution, Eq. (13) can be easily solved numerically.

4.3 Model Comparison and Analysis

As discussed previously, the yield stress in the axisymmetric model will be a function of r, which is assumed to follow an inverse power law (Gavin *et al., 19*96)

$$\tau_y(r) = C/r^n \tag{17}$$

where C and n are empirical material constants. Note that when $n = 0$, the yield force is a constant. A comparison between parallel-plate model and the axisymmetric model for $n = 0, 1.5, 2.5$ was made for the nominal design parameters of the full-scale damper given in Section 3. Piston velocities of 1, 5 and 10 cm/sec were considered. The maximum error between the various axisymmetric models and the parallel-plate model was no more than 0.5% for $h/R_1 < 0.2$ and less than 3% for $h/R_1 < 0.4$. Therefore, the simpler, parallel-plate model is seen to be very accurate for practical designs.

Now, using the parallel-plate model, the effects of the viscous and field-induced forces can be better seen by decomposing the force as follows (see Fig. 4)

$$F = F_\eta + F_\tau \tag{18}$$

Here F_η is the force component due to the fluid viscosity

$$F_\eta = \left(1 - \frac{whU}{2Q}\right)\frac{12\eta QLA_p}{wh^3} \tag{19}$$

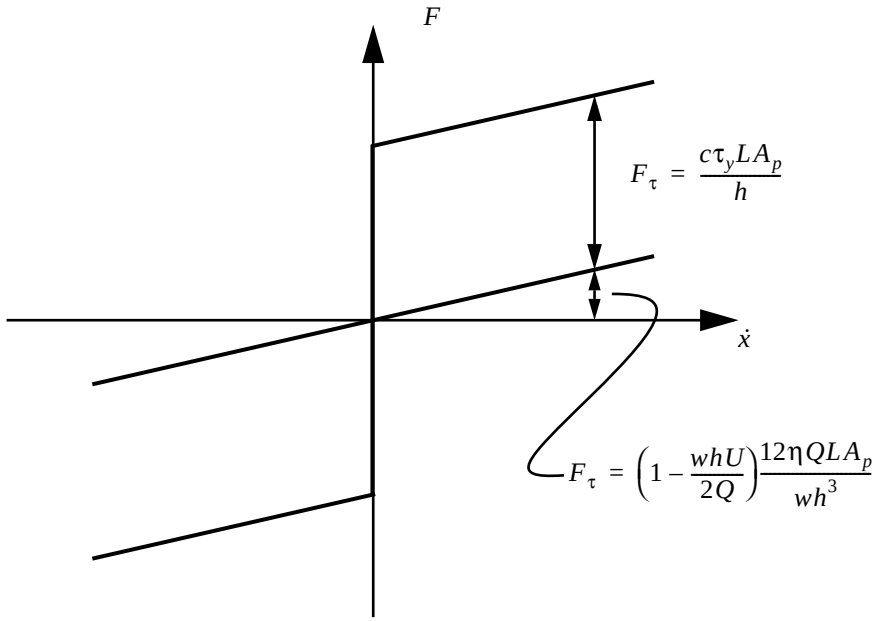

Figure 4. Illustration of controllable force range of damper.

and F_τ is the controllable force range (*i.e.*, due to the field-induced yield stress)

$$F_\tau = c\frac{\tau_y L A_p}{h} \tag{20}$$

where c is implicitly governed by Eq. (13). For $0 < T < 1000$ and $\mathcal{V} < 0$, which encompasses most practical designs, c can be approximated to within 3% as follows.

$$c \approx 2.07 + \frac{1}{1 + 0.4\mathcal{T}} \tag{21}$$

In this region, c is bounded to the interval (2.07, 3.07).

The implications of this result are significant to damper design. The field-induced force F_τ constitutes the controllable range of the damper, which is inversely related to the gap size h. To maximize the effectiveness of the MR damper, the controllable range of the force should be as large as possible. Therefore, in contrast to what has been stated recently (Gordaninejad *et al., 19*98), a larger gap size will reduce the controllable force range, and therefore the effectiveness of the damper. For the full-scale damper reported herein, $h/R_1 = 0.02$.

5. EXPERIMENTAL VERIFICATION

Fig. 5 shows the experimental setup for the 20-ton MR fluid damper at the Structural Dynamics and Control / Earthquake Engineering Laboratory at the University of Notre Dame (see *http://www.nd.edu/~quake/*). The damper was attached to a 7.5 cm thick plate that was grouted to a 2 m thick strong floor. The damper is driven by a 560 kN actuator configured with a 305 lpm servo-valve with a bandwidth of 80 Hz. A Schenck-Pegasus 5910 servo-

Figure 5. Experimental setup for 20-ton MR fluid damper.

hydraulic controller is employed in conjunction with a 200 MPa, 340 lpm hydraulic pump. The displacement of the damper is measured using a linear variable differential transducer (LVDT) that is integral to the actuator, and the force is measured by a force transducer connected to the actuator.

Fig. 6a shows the measured force-displacement loops for the damper under 5.4 cm/sec triangular waveform movements under the maximum magnetic field and no magnetic field. At the maximum magnetic field, the output force of the damper is 201 kN which is within 0.5% of the design specification of 200 kN. Moreover, the dynamic range of the damper is 12.97 which is well over the design specification of 10.

Fig. 6b also shows the measured force-velocity behavior compared with the results of the parallel-plate model. The analytical model is in close agreement with the experimental results, with a maximum error of less than 5%.

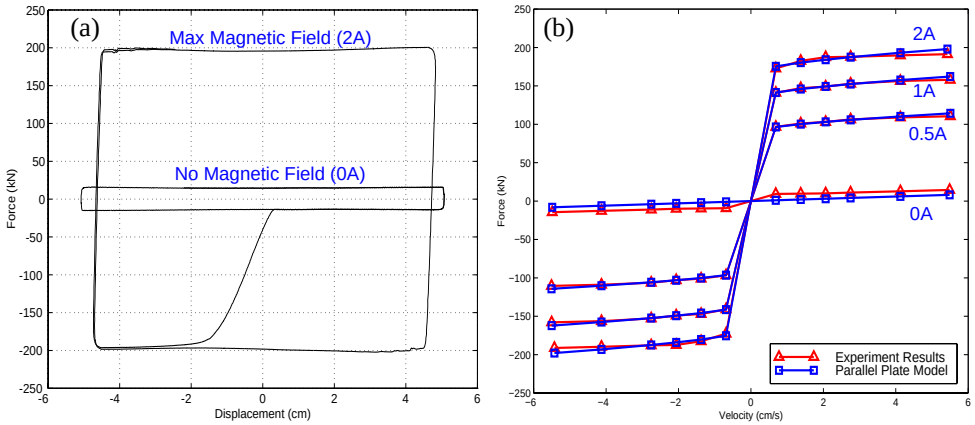

Figure 6. (a) Measured force-displacement loops at 5.4 cm/sec;
(b) Comparison of measured and predicted force-velocity relationship.

6. CONCLUSIONS

Magnetorheological (MR) fluid dampers have provided technology that has enabled effective semi-active control in a number of real world applications. Because of their simplicity, low input power, scalability and inherent robustness, such MR fluid dampers are quite promising for civil engineering applications. A 20-ton MR damper capable of providing semi-active damping for full-size structural applications has been designed and constructed by the Lord Corporation and tested at the University of Notre Dame. The simple parallel-plate model has been shown to accurately approximate the force-velocity behavior in the axisymmetric flow field and to provide an important tool for design of MR dampers. Moreover, the controllable force range of the damper has been shown to be inversely related to the gap size h. These results have been shown to be in close agreement with the experimental data, confirming the design of the damper.

ACKNOWLEDGMENTS

The research efforts of the authors from Notre Dame are supported in part by National Science Foundation Grant Nos. CMS 95–00301 and CMS 95–28083 (Dr. S.C. Liu, Program Director).

REFERENCES

Carlson, J.D. (1994). The Promise of Controllable Fluids. *Proc., Actuator 94,* (H.Borgmann and K. Lenz, Eds., AXON Technologie), pp. 266–270.

Carlson, J.D. and Spencer Jr., B.F. (1996) Magneto-Rheological Fluid Dampers for Semi-Active Seismic Control. *Proc., 3rd Int. Conf. on Motion and Vib. Control,* Chiba, Japan, Vol. III, pp. 35–40.

Carlson, J.D., Catanzarite, D.M., St. Clair, K.A. (1996). Commercial Magneto-Rheological Fluid Devices. *Proc. 5th Int. Conf. on ER Fluids, MR Fluids and Assoc. Tech.,* July 1995 (W.A. Bullough, Ed., World Scientific, Singapore) pp. 20–28.

Constantinescu, V.N. (1995). *Laminar Viscous Flow,* Springer, New York.

Dyke, S. J., Spencer Jr., B.F., Sain, M.K. and Carlson, J.D. (1996a). Seismic Response Reduction Using Magnetorheological Dampers. *Proc. IFAC World Cong.,* San Francisco, California, Vol. L, pp. 145–150.

Dyke, S. J., Spencer Jr., B.F., Sain, M.K. and Carlson, J.D. (1996b). Experimental Verification of Semi-Active Structural Control Strategies Using Acceleration Feedback. *Proc. 3rd Int. Conf. on Motion and Vibr. Control,* Chiba, Japan, Vol 3, pp. 291–296.

Dyke, S. J., Spencer Jr., B.F., Sain, M.K.and Carlson, J.D. (1996c). Modeling and Control of Magnetorheological Dampers for Seismic Response Reduction. *Smart Mat. and Struct.,* Vol. 5, pp. 565–575.

Fujino, Y., Soong, T.T. and Spencer Jr., B.F. (1996). Structural Control: Basic Concepts and Applications. *Proc., ASCE Struct. Cong. XIV,* pp. 1277–1287.

Gavin, H.P., Hanson, R.D. and Filisko, F.E. (1996). Electrorheological Dampers, Part I: Analysis and Design. *J. Appl. Mech.,* 63(9), pp. 669–675.

Gordaninejad, F., Saiidi, M., Chang, F-K. and Hansen, B.C. (1998). Control of Bridges Using Magneto-Rheological Fluid Dampers and Fiber-Reinforced, Composite-Materials. *Proc., 1998 SPIE Conf. on Smart Struct. and Mat.*

Housner, G.W. *et al*. (1997). Structural Control: Past, Present, and Future. *J. Engrg. Mech.,* pp. 897–971.

Phillips, R. W. (1969) Engineering Applications of Fluids with a Variable Yield Stress. Ph.D. Thesis, University of California, Berkeley.

Rabinow, J. (1948). The Magnetic Fluid Clutch. *AIEE Transactions,* Vol. 67, pp. 1308–1315.

Rabinow, J. (1951). Magnetic Fluid Torque and Force Transmitting Device. U.S. Patent 2,575,360.

Spencer Jr., B. F., Dyke, S.J., Sain, M.K. and Carlson, J.D. (1997). Phenomenological Model of a Magnetorheological Damper. *J. Engrg. Mech., ASCE,* Vol. 123, No. 3, pp. 230–238.

Spencer, Jr., B.F. and Sain, M.K. (1997). Controlling Buildings: A New Frontier in Feedback. *IEEE Contrl System,* Dec., pp. 19–35.